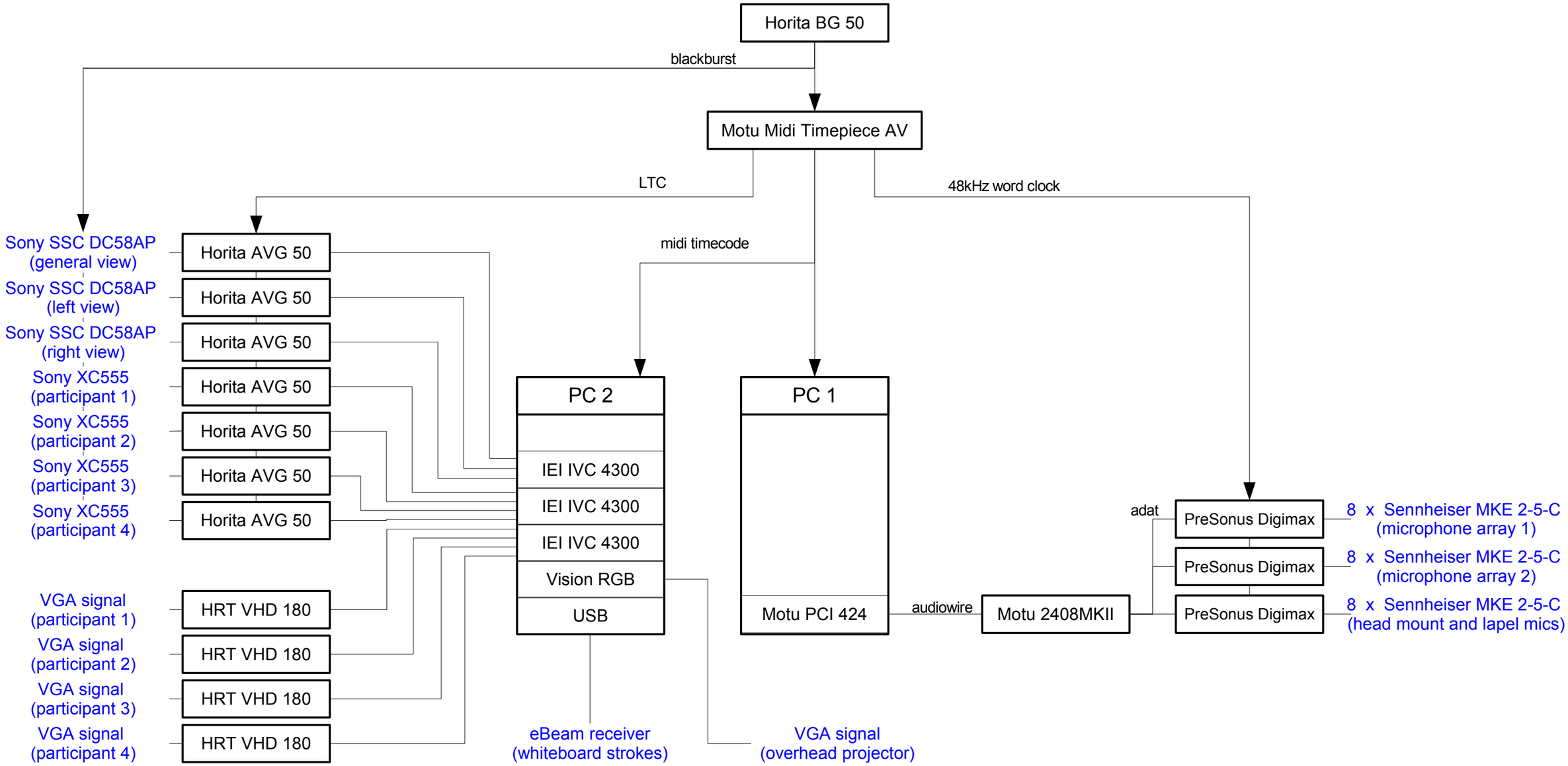
Horita BG 50
blackburst
Motu Midi Timepiece AV
LTC
48kHz word clock
midi timecode
Sony SSC DC58AP (general view)
Sony SSC DC58AP (left view)
Sony SSC DC58AP (right view)
Sony XC555 (participant 1)
Sony XC555 (participant 2)
Sony XC555 (participant 3)
Sony XC555 (participant 4)
Horita AVG 50
Horita AVG 50
Horita AVG 50
Horita AVG 50
Horita AVG 50
Horita AVG 50
Horita AVG 50
PC 2
IEI IVC 4300
IEI IVC 4300
IEI IVC 4300
Vision RGB
USB
PC 1
Motu PCI 424
audiowire
Motu 2408MKII
adat
PreSonus Digimax
PreSonus Digimax
PreSonus Digimax
8 x Sennheiser MKE 2-5-C (microphone array 1)
8 x Sennheiser MKE 2-5-C (microphone array 2)
8 x Sennheiser MKE 2-5-C (head mount and lapel mics)
VGA signal (participant 1)
VGA signal (participant 2)
VGA signal (participant 3)
VGA signal (participant 4)
HRT VHD 180
HRT VHD 180
HRT VHD 180
HRT VHD 180
eBeam receiver (whiteboard strokes)
VGA signal (overhead projector)